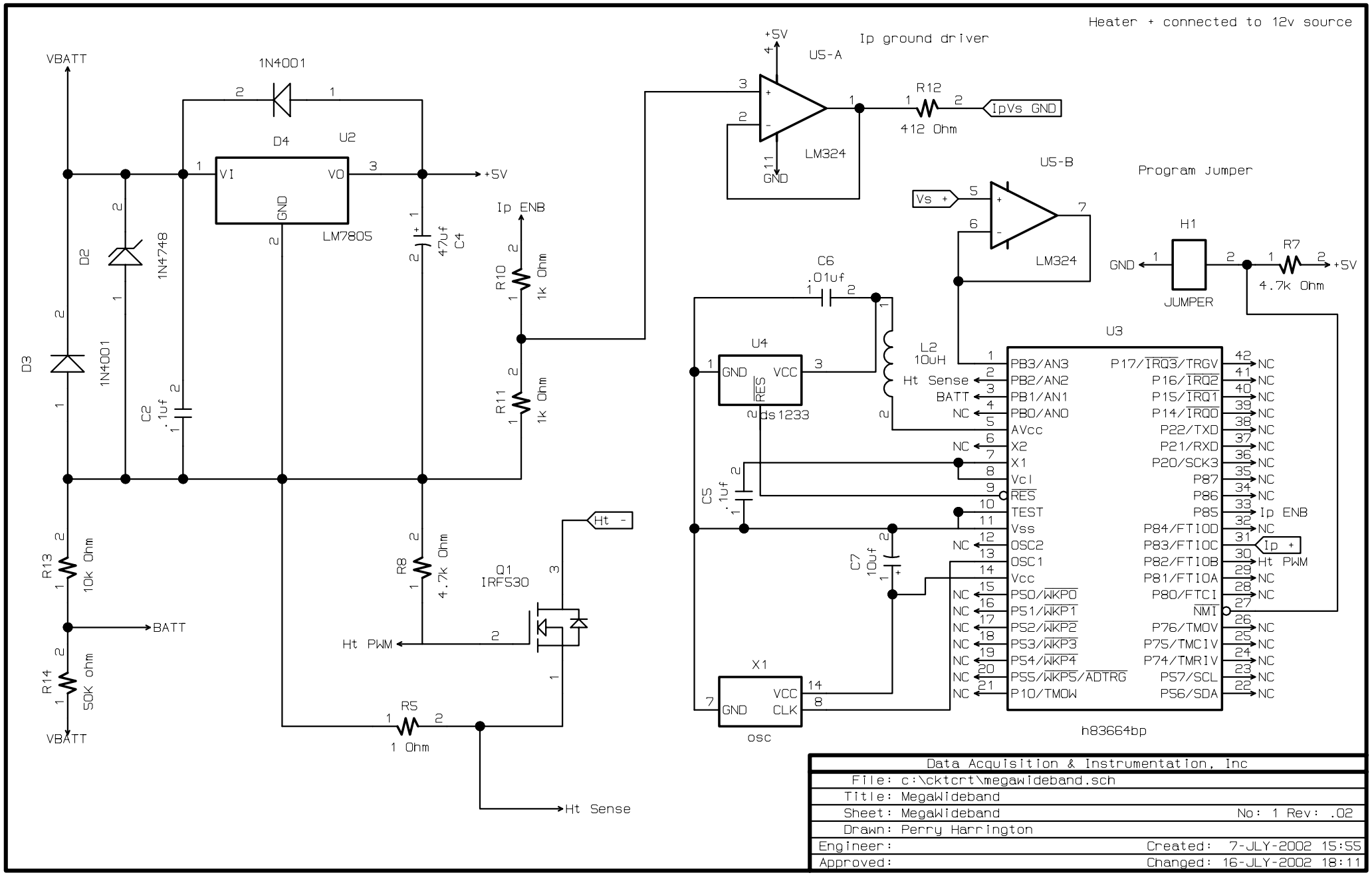
Heater + connected to 12v source
VBATT
1N4001
D4
U2
VI
VO
GND
LM7805
+5V
D2
1N4748
D3
1N4001
C2
.1uf
47uf
C4
Ip ENB
R10
1k Ohm
R11
1k Ohm
R13
10k Ohm
R14
50K ohm
BATT
VBATT
R8
4.7k Ohm
Ht PWM
Q1
IRF530
Ht -
R5
1 Ohm
Ht Sense
Ip ground driver
U5-A
LM324
R12
412 Ohm
IpVs GND
U5-B
Vs +
LM324
Program Jumper
H1
JUMPER
R7
4.7k Ohm
C6
.01uf
U4
ds1233
L2
10uH
Ht Sense
BATT
C5
.1uf
C7
10uf
X1
osc
U3
h83664bp
PB3/AN3
PB2/AN2
PB1/AN1
PB0/AN0
AVcc
X2
X1
Vcl
RES
TEST
Vss
OSC2
OSC1
Vcc
P50/WKP0
P51/WKP1
P52/WKP2
P53/WKP3
P54/WKP4
P55/WKP5/ADTRG
P10/TMOW
P17/IRQ3/TRGV
P16/IRQ2
P15/IRQ1
P14/IRQ0
P22/TXD
P21/RXD
P20/SCK3
P87
P86
P85
P84/FTIOD
P83/FTIOC
P82/FTIOB
P81/FTIOA
P80/FTCI
NMI
P76/TMOV
P75/TMCIV
P74/TMRIV
P57/SCL
P56/SDA
Ip ENB
Ip +
Ht PWM
Data Acquisition & Instrumentation, Inc
File: c:\cktcrt\megawideband.sch
Title: MegaWideband
Sheet: MegaWideband
No: 1 Rev: .02
Drawn: Perry Harrington
Engineer:
Created: 7-JLY-2002 15:55
Approved:
Changed: 16-JLY-2002 18:11